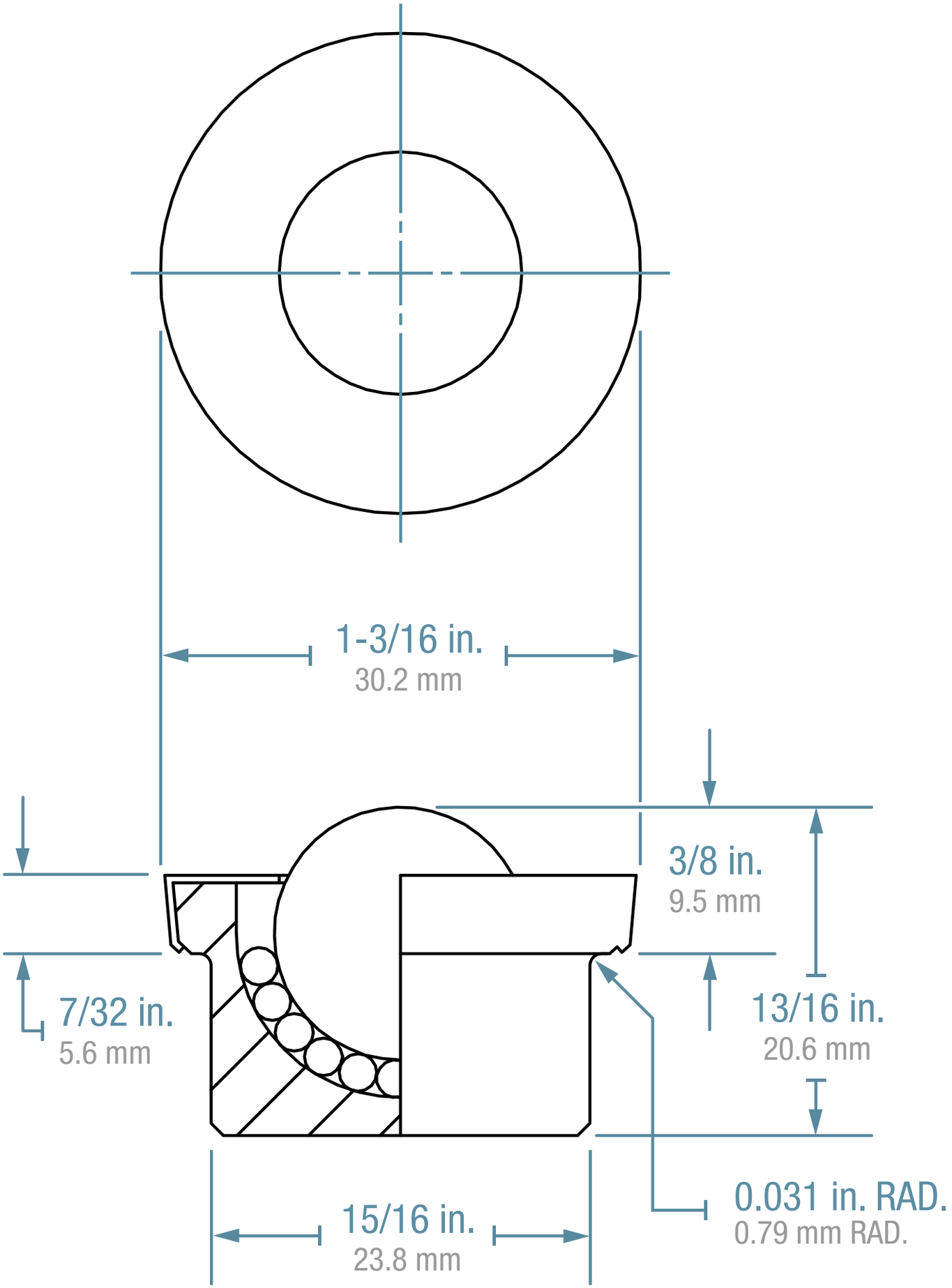
1-3/16 in.
30.2 mm
3/8 in.
9.5 mm
7/32 in.
5.6 mm
13/16 in.
20.6 mm
15/16 in.
23.8 mm
0.031 in. RAD.
0.79 mm RAD.