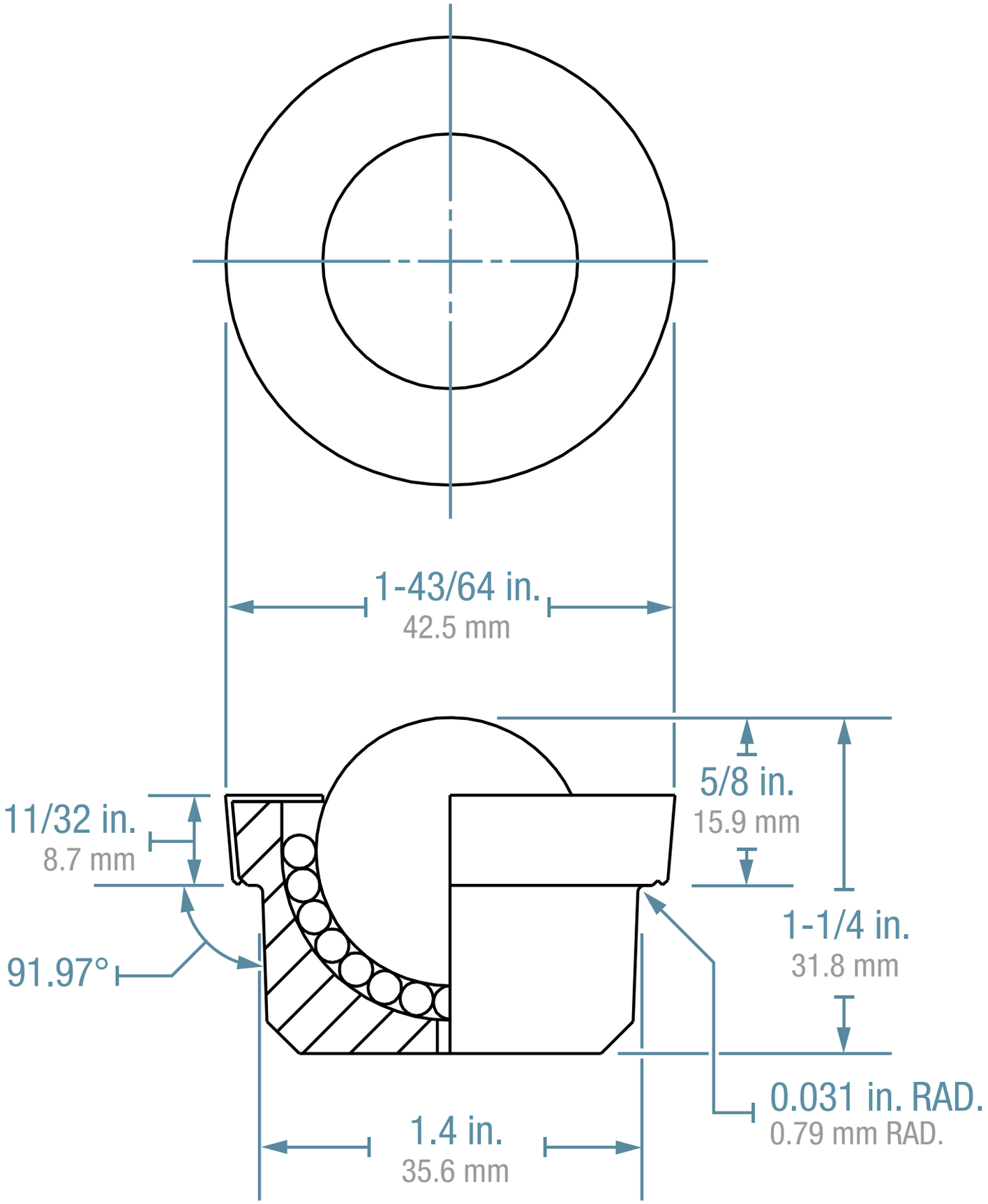
1-43/64 in.
42.5 mm
5/8 in.
15.9 mm
11/32 in.
8.7 mm
1-1/4 in.
31.8 mm
91.97°
0.031 in. RAD.
0.79 mm RAD.
1.4 in.
35.6 mm