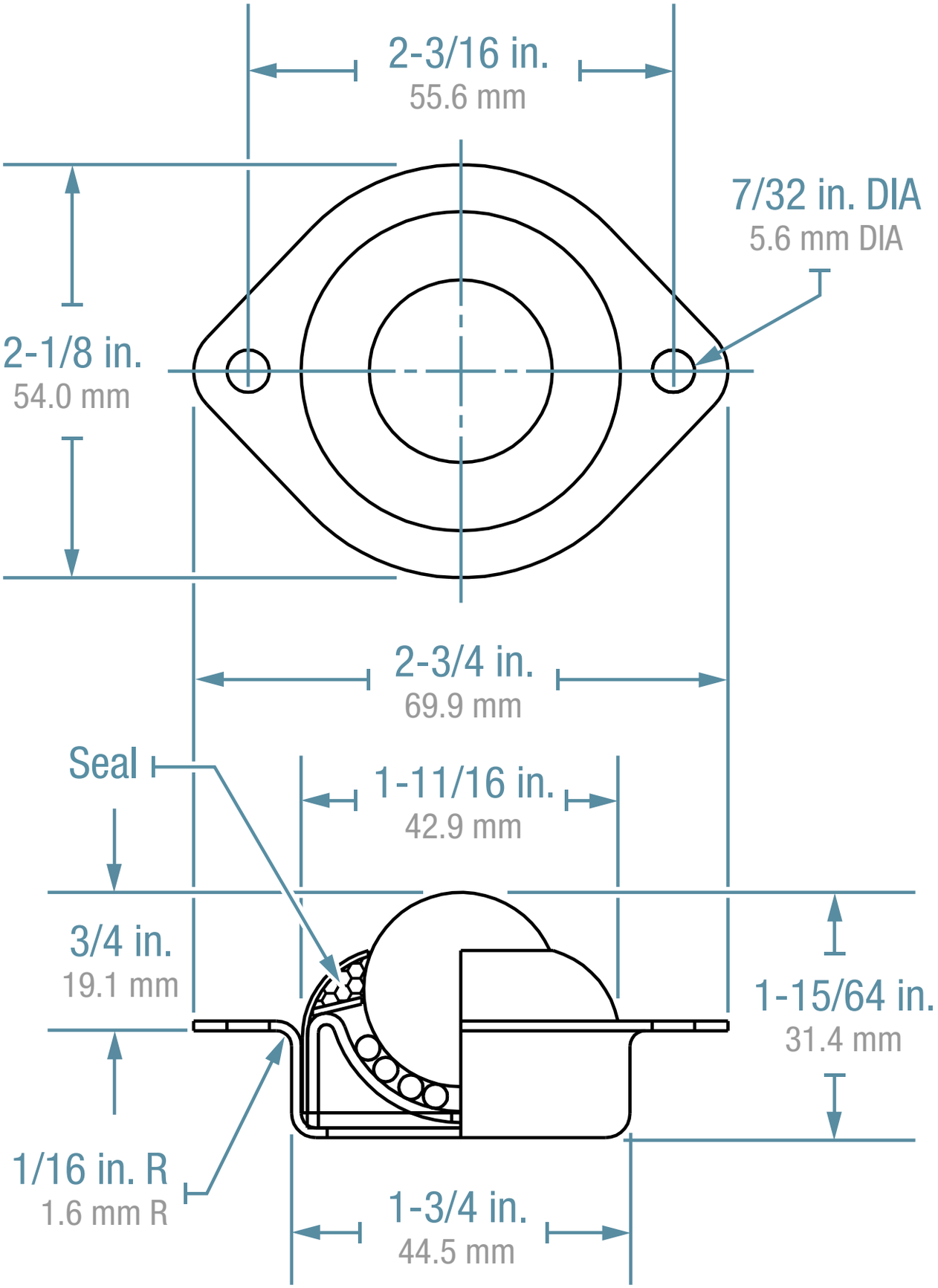
2-3/16 in.
55.6 mm
7/32 in. DIA
5.6 mm DIA
2-1/8 in.
54.0 mm
2-3/4 in.
69.9 mm
Seal
1-11/16 in.
42.9 mm
3/4 in.
19.1 mm
1-15/64 in.
31.4 mm
1/16 in. R
1.6 mm R
1-3/4 in.
44.5 mm