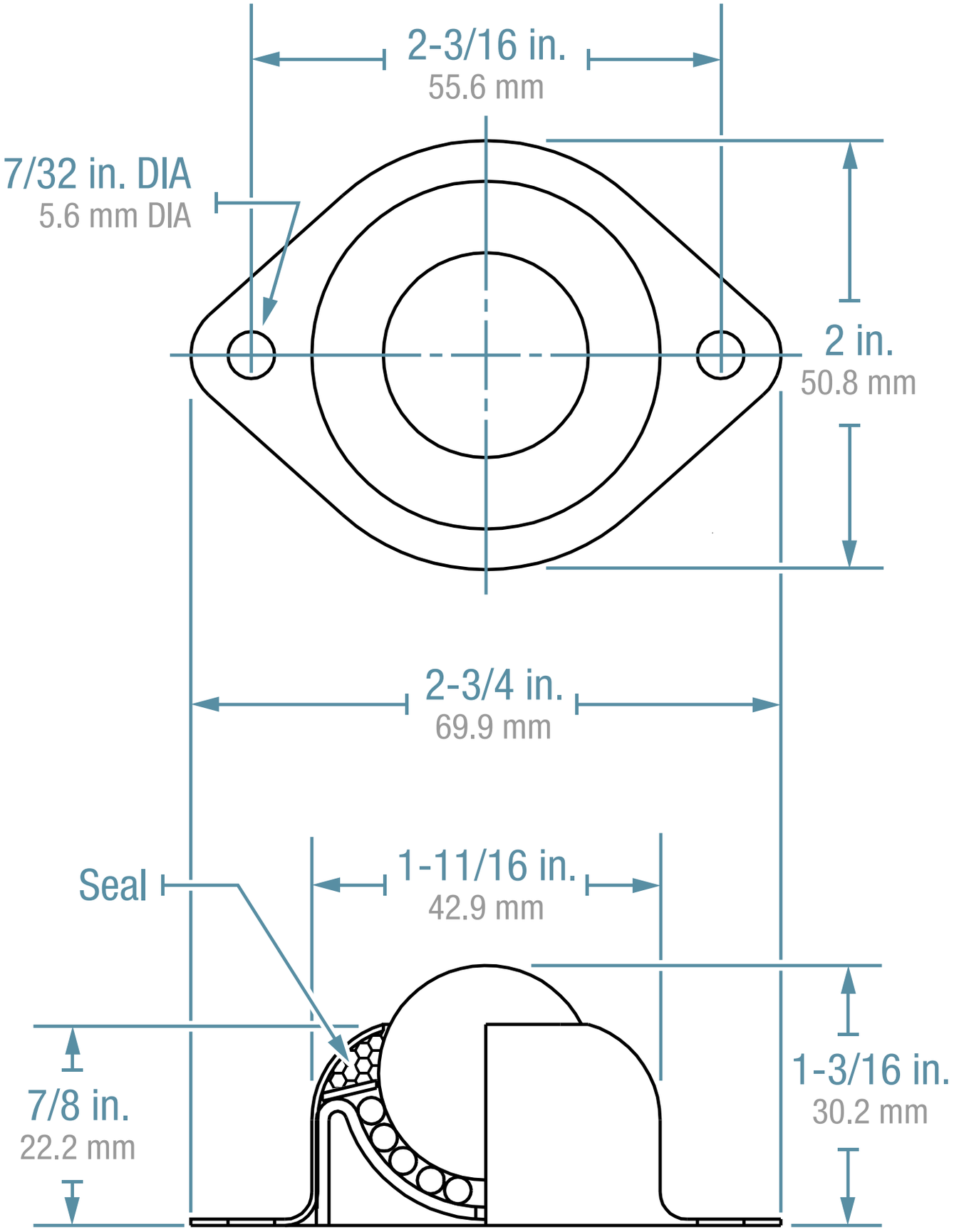
2-3/16 in.
55.6 mm
7/32 in. DIA
5.6 mm DIA
2 in.
50.8 mm
2-3/4 in.
69.9 mm
Seal
1-11/16 in.
42.9 mm
7/8 in.
22.2 mm
1-3/16 in.
30.2 mm