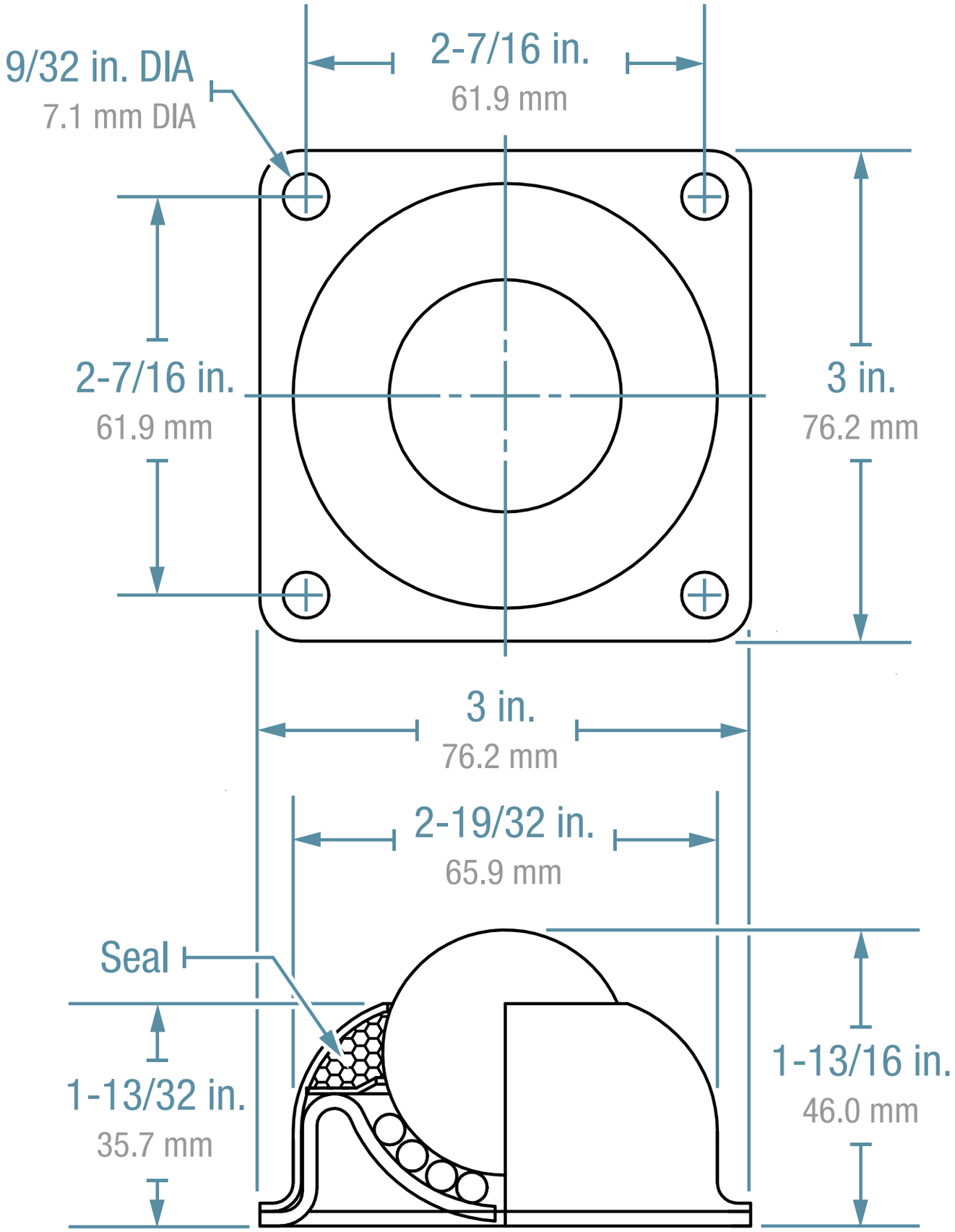
9/32 in. DIA
7.1 mm DIA
2-7/16 in.
61.9 mm
2-7/16 in.
61.9 mm
3 in.
76.2 mm
3 in.
76.2 mm
2-19/32 in.
65.9 mm
Seal
1-13/32 in.
35.7 mm
1-13/16 in.
46.0 mm